Track roller FG824 EESW NADELLA

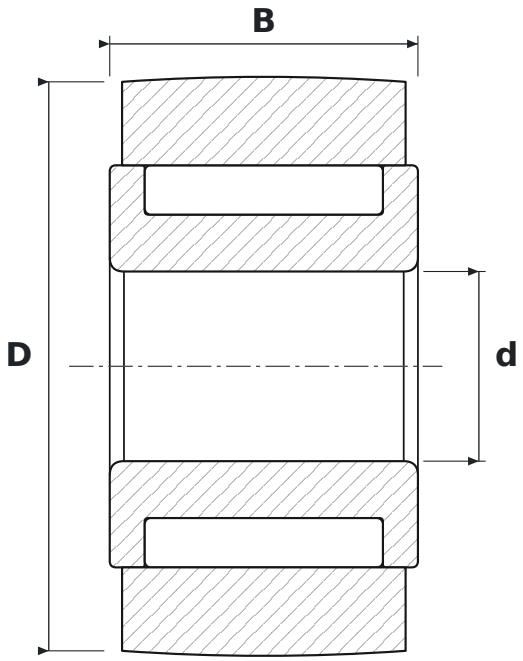

DIMENSIONS

d	bore diameter	**8 mm**
D	outside diameter	**24 mm**
B	width	**13 mm**

SPECIFICATIONS

Manufacturer	**NADELLA**
Manufacturer designation	**FG824 EESW**
Rolling elements	**needle roller bearing, full complement**
E	**reinforced design, higher load rating**
Seal	**open – no seals**