# Track roller FG824 SW NADELLA

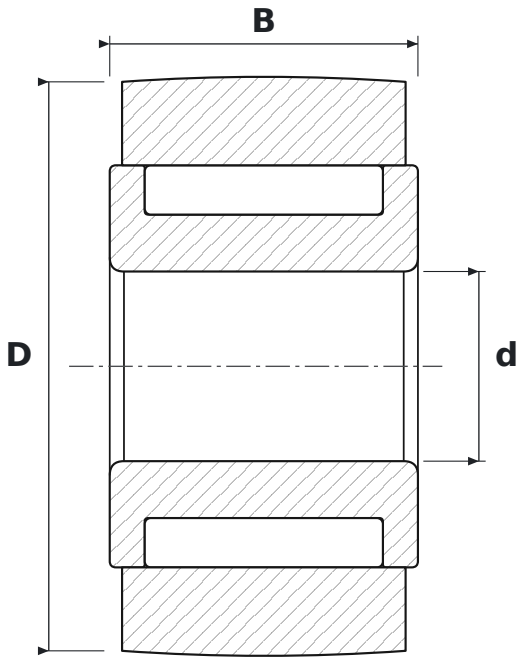


## DIMENSIONS

| | | |
|---|---|---|
| **d** | bore diameter | **8 mm** |
| **D** | outside diameter | **24 mm** |
| **B** | width | **13 mm** |

## SPECIFICATIONS

| | |
|---|---|
| Manufacturer | **NADELLA** |
| Manufacturer designation | **FG824 SW** |
| Rolling elements | **needle roller bearing, full complement** |
| Seal | **open – no seals** |