Track roller FGL1535 EESW NADELLA

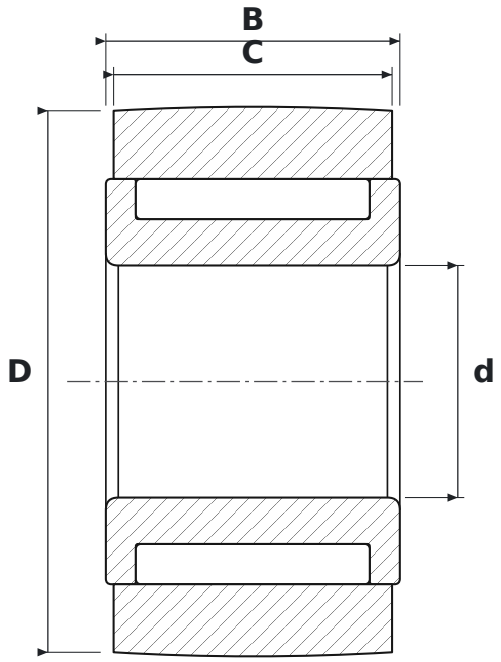

DIMENSIONS

d	bore diameter	**15 mm**
D	outside diameter	**35 mm**
C	roller running width	**18 mm**
B	width	**19 mm**

SPECIFICATIONS

Manufacturer	**NADELLA**
Manufacturer designation	**FGL1535 EESW**
C – outer ring width	**18 mm**
Rolling elements	**needle roller bearing, full complement**
E	**reinforced design, higher load rating**
Seal	**open – no seals**