Track roller FGL1740 EESW NADELLA

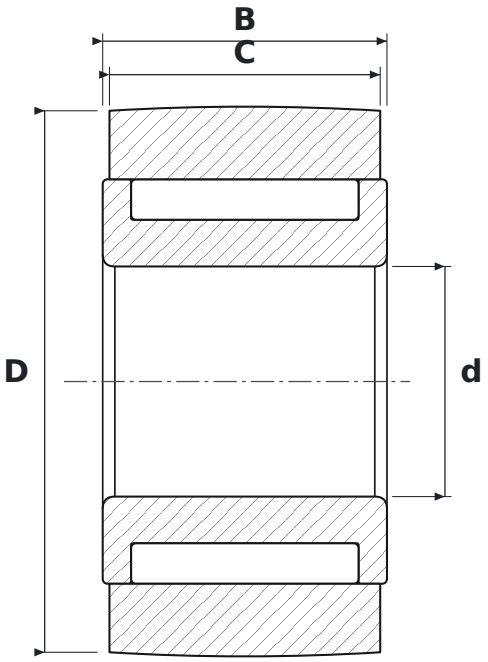

DIMENSIONS

d	bore diameter	**17 mm**
D	outside diameter	**40 mm**
C	roller running width	**20 mm**
B	width	**21 mm**

SPECIFICATIONS

Manufacturer	**NADELLA**
Manufacturer designation	**FGL1740 EESW**
C – outer ring width	**20 mm**
Rolling elements	**needle roller bearing, full complement**
E	**reinforced design, higher load rating**
Seal	**open – no seals**