Track roller FGL3062 EEM INNE

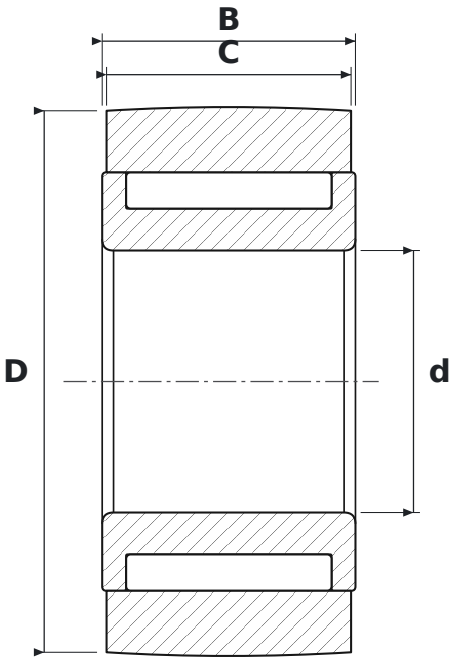

DIMENSIONS

d	bore diameter	**30 mm**
D	outside diameter	**62 mm**
C	roller running width	**28 mm**
B	width	**29 mm**

WHAT FGL3062 EEM MEANS

E	reinforced design, higher load rating
EM	machined brass cage (NSK)

SPECIFICATIONS

Manufacturer	**INNE**
Manufacturer designation	**FGL3062 EEM**
C – outer ring width	**28 mm**
Rolling elements	**needle roller bearing, full complement**
Mass	**0.49 kg**