Track roller FGL516 EE NADELLA

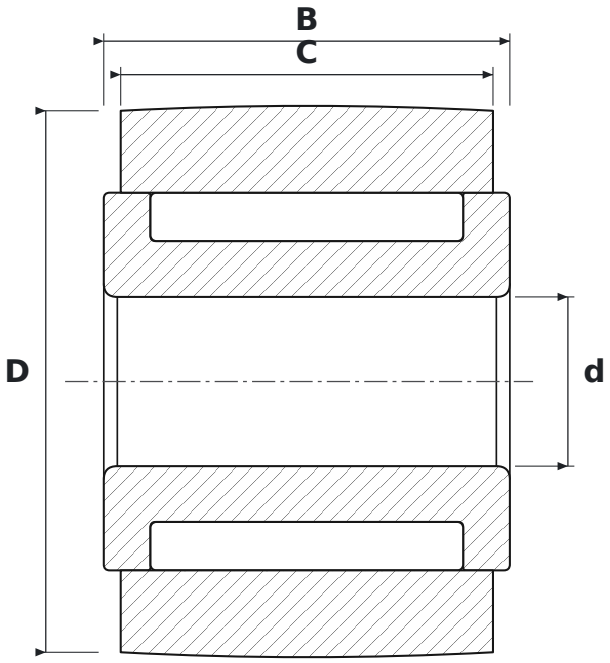

DIMENSIONS

d	bore diameter	**5 mm**
D	outside diameter	**16 mm**
C	roller running width	**11 mm**
B	width	**12 mm**

WHAT FGL516 EE MEANS

E	reinforced design, higher load rating
E	reinforced design, higher load rating

SPECIFICATIONS

Manufacturer	**NADELLA**
Manufacturer designation	**FGL516 EE**
C – outer ring width	**11 mm**
Rolling elements	**needle roller bearing, full complement**