Track roller FGL516 NADELLA

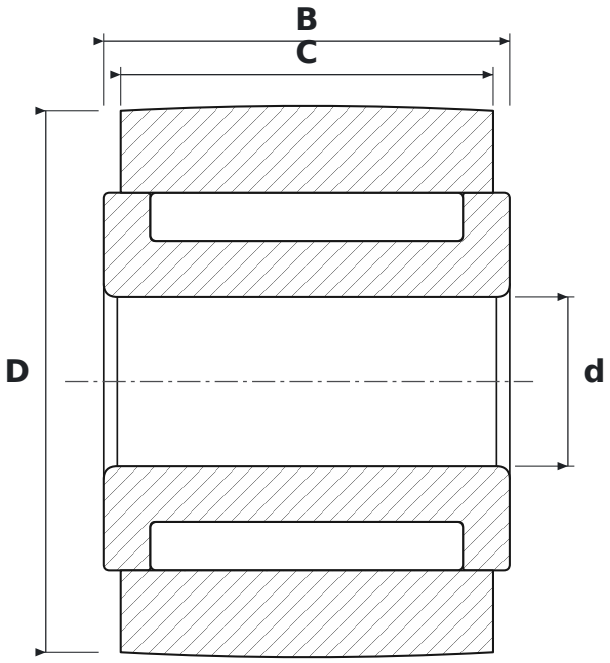

DIMENSIONS

d	bore diameter	**5 mm**
D	outside diameter	**16 mm**
C	roller running width	**11 mm**
B	width	**12 mm**

SPECIFICATIONS

Manufacturer	**NADELLA**
Manufacturer designation	**FGL516**
C – outer ring width	**11 mm**
Rolling elements	**needle roller bearing, full complement**
Seal	**open – no seals**