Track roller FGL65120 EEMSW NADELLA

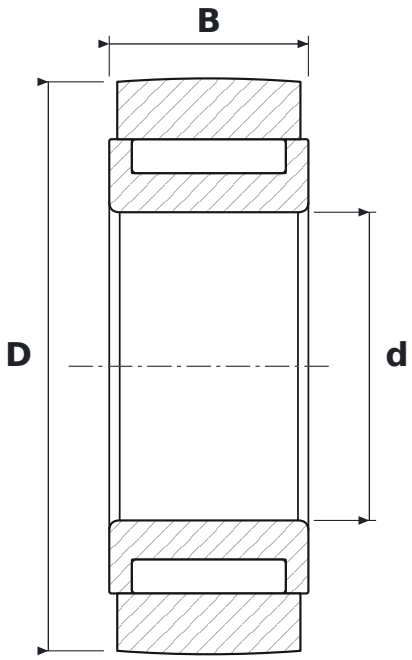

DIMENSIONS

d	bore diameter	**65 mm**
D	outside diameter	**120 mm**
B	width	**42 mm**

SPECIFICATIONS

Manufacturer	**NADELLA**
Manufacturer designation	**FGL65120 EEMSW**
Rolling elements	**needle roller bearing, full complement**
E	**reinforced design, higher load rating**
EM	**machined brass cage (NSK)**
Seal	**open – no seals**