Track roller FGL80140 EEMSW INNE

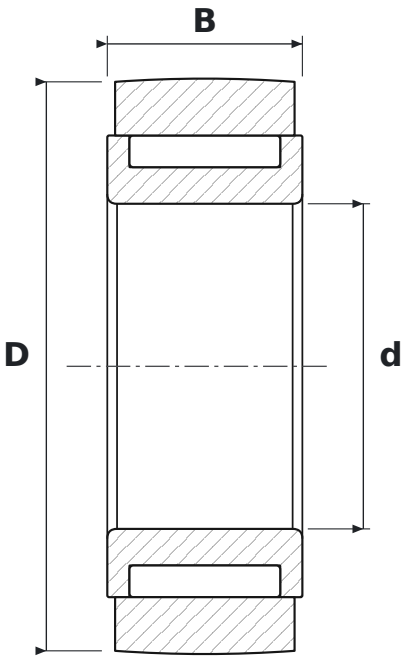

DIMENSIONS

d	bore diameter	**80 mm**
D	outside diameter	**140 mm**
B	width	**48 mm**

SPECIFICATIONS

Manufacturer	**INNE**
Manufacturer designation	**FGL80140 EEMSW**
Rolling elements	**needle roller bearing, full complement**
E	**reinforced design, higher load rating**
EM	**machined brass cage (NSK)**
Seal	**open – no seals**
Mass	**3.4 kg**