Track roller FGU2047 MM INNE

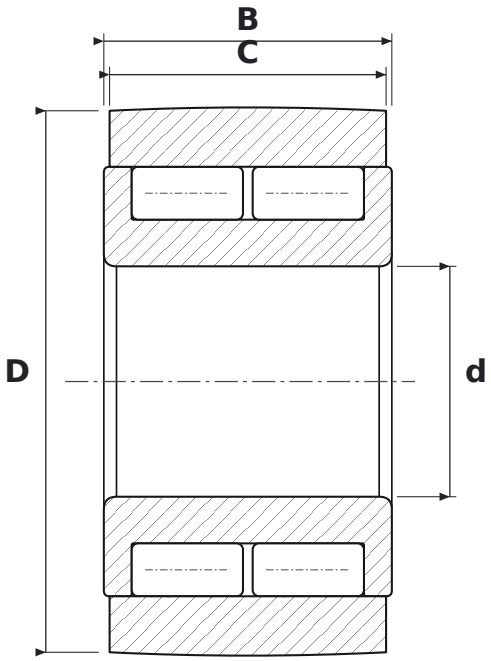

DIMENSIONS

d	bore diameter	**20 mm**
D	outside diameter	**47 mm**
C	roller running width	**24 mm**
B	width	**25 mm**

WHAT FGU2047 MM MEANS

M	machined brass cage
M	machined brass cage

SPECIFICATIONS

Manufacturer	**INNE**
Manufacturer designation	**FGU2047 MM**
C – outer ring width	**24 mm**
Rolling elements	**cylindrical roller bearing, full complement**
Mass	**0.295 kg**