Track roller FGU45100 MM INNE

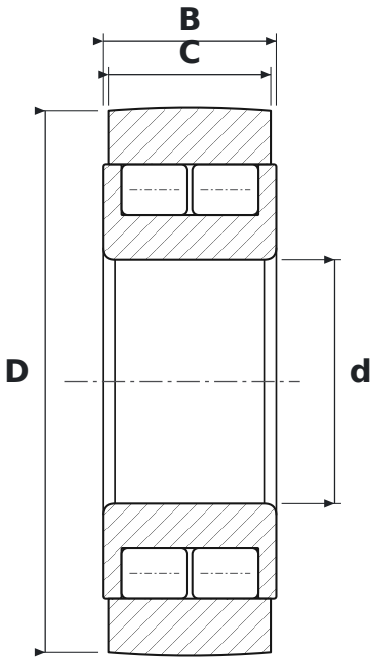

DIMENSIONS

d	bore diameter	**45 mm**
D	outside diameter	**100 mm**
C	roller running width	**30 mm**
B	width	**32 mm**

WHAT FGU45100 MM MEANS

M	machined brass cage
M	machined brass cage

SPECIFICATIONS

Manufacturer	**INNE**
Manufacturer designation	**FGU45100 MM**
C – outer ring width	**30 mm**
Rolling elements	**cylindrical roller bearing, full complement**
Mass	**1.395 kg**