Track roller FGU5090 MM INNE

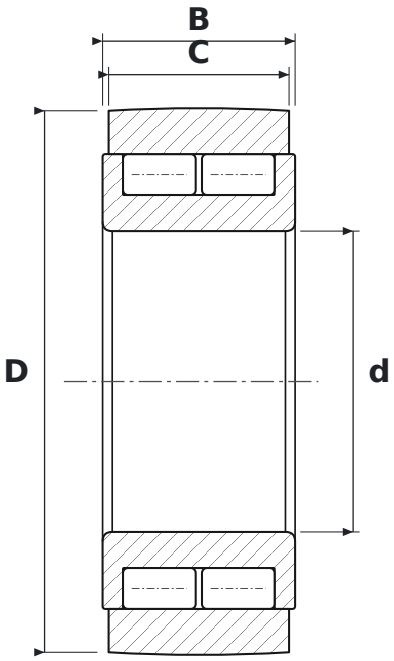

DIMENSIONS

d	bore diameter	**50 mm**
D	outside diameter	**90 mm**
C	roller running width	**30 mm**
B	width	**32 mm**

WHAT FGU5090 MM MEANS

M	machined brass cage
M	machined brass cage

SPECIFICATIONS

Manufacturer	**INNE**
Manufacturer designation	**FGU5090 MM**
C – outer ring width	**30 mm**
Rolling elements	**cylindrical roller bearing, full complement**
Mass	**0.991 kg**