Track roller GC30 EEMSW INNE

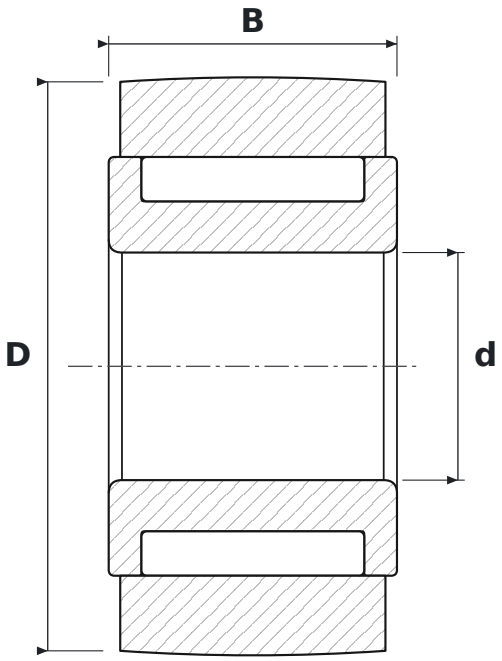

DIMENSIONS

d	bore diameter	**12 mm**
D	outside diameter	**30 mm**
B	width	**15.2 mm**

SPECIFICATIONS

Manufacturer	**INNE**
Manufacturer designation	**GC30 EEMSW**
Rolling elements	**needle roller bearing, full complement**