Track roller GC35 SW NADELLA

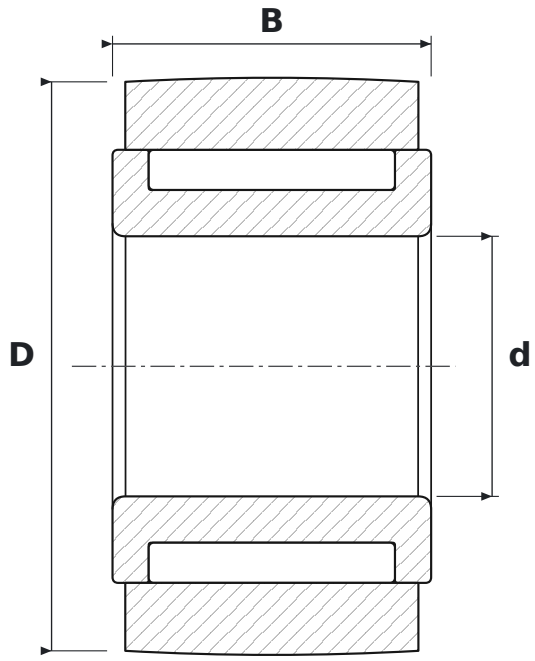

DIMENSIONS

d	bore diameter	**16 mm**
D	outside diameter	**35 mm**
B	width	**19.6 mm**

SPECIFICATIONS

Manufacturer	**NADELLA**
Manufacturer designation	**GC35 SW**
Rolling elements	**needle roller bearing, full complement**