Track roller GC40 SW NADELLA

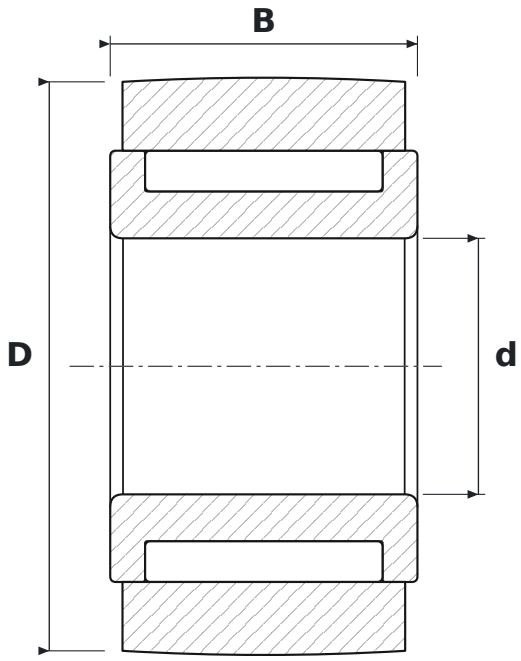

DIMENSIONS

d	bore diameter	**18 mm**
D	outside diameter	**40 mm**
B	width	**21.6 mm**

SPECIFICATIONS

Manufacturer	**NADELLA**
Manufacturer designation	**GC40 SW**
Rolling elements	**needle roller bearing, full complement**