Track roller GC47 EEMSW NADELLA

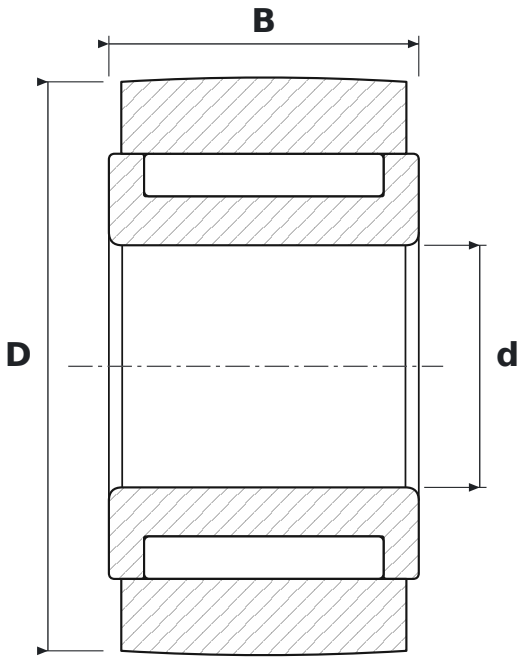

DIMENSIONS

d	bore diameter	**20 mm**
D	outside diameter	**47 mm**
B	width	**25.6 mm**

SPECIFICATIONS

Manufacturer	**NADELLA**
Manufacturer designation	**GC47 EEMSW**
Rolling elements	**needle roller bearing, full complement**