Track roller GC52 SW NADELLA

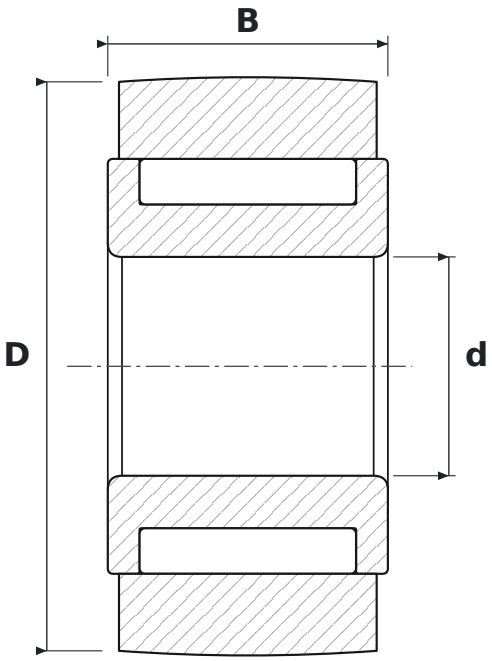

DIMENSIONS

d	bore diameter	**20 mm**
D	outside diameter	**52 mm**
B	width	**25.6 mm**

SPECIFICATIONS

Manufacturer	**NADELLA**
Manufacturer designation	**GC52 SW**
Rolling elements	**needle roller bearing, full complement**