Track roller GC62 EEMSW NADELLA

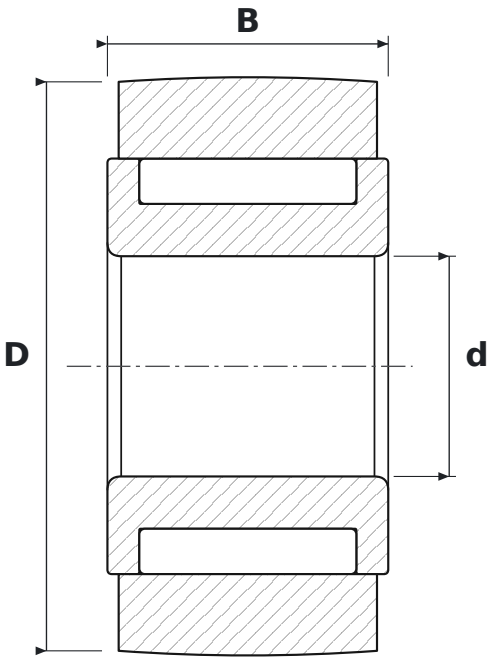

DIMENSIONS

d	bore diameter	**24 mm**
D	outside diameter	**62 mm**
B	width	**30.6 mm**

SPECIFICATIONS

Manufacturer	**NADELLA**
Manufacturer designation	**GC62 EEMSW**
Rolling elements	**needle roller bearing, full complement**