Track roller GCL22 SW NADELLA

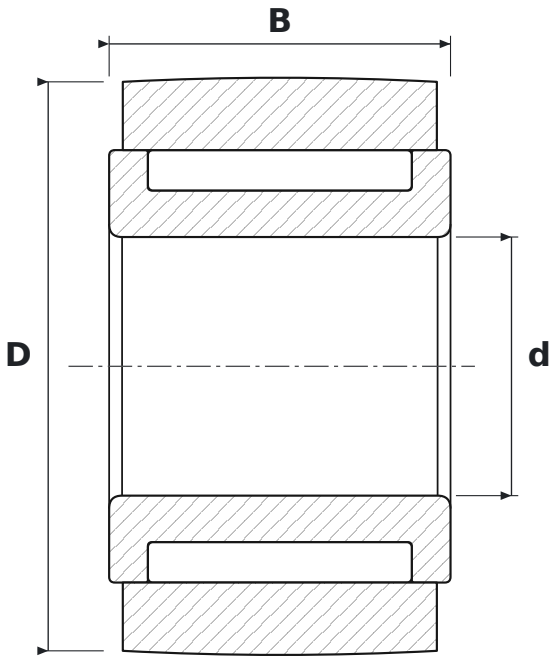

DIMENSIONS

d	bore diameter	**10 mm**
D	outside diameter	**22 mm**
B	width	**13.2 mm**

SPECIFICATIONS

Manufacturer	**NADELLA**
Manufacturer designation	**GCL22 SW**
Rolling elements	**needle roller bearing, full complement**