Track roller GCL62 INNE

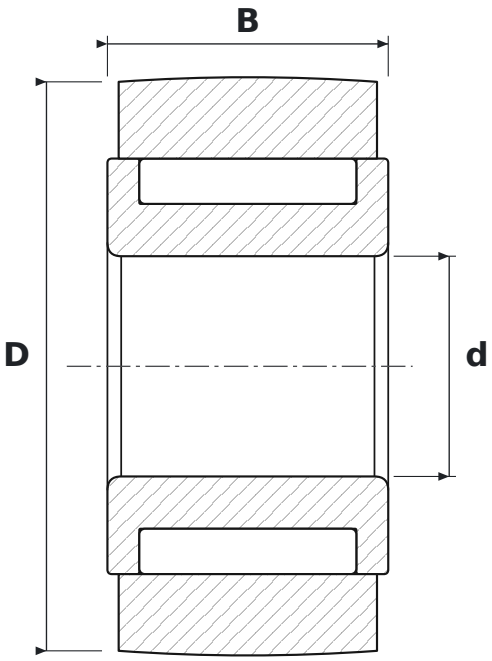

DIMENSIONS

d	bore diameter	**24 mm**
D	outside diameter	**62 mm**
B	width	**30.6 mm**

SPECIFICATIONS

Manufacturer	**INNE**
Manufacturer designation	**GCL62**
Rolling elements	**needle roller bearing, full complement**
Mass	**0.944 kg**