Track roller GCR22 EEM INNE

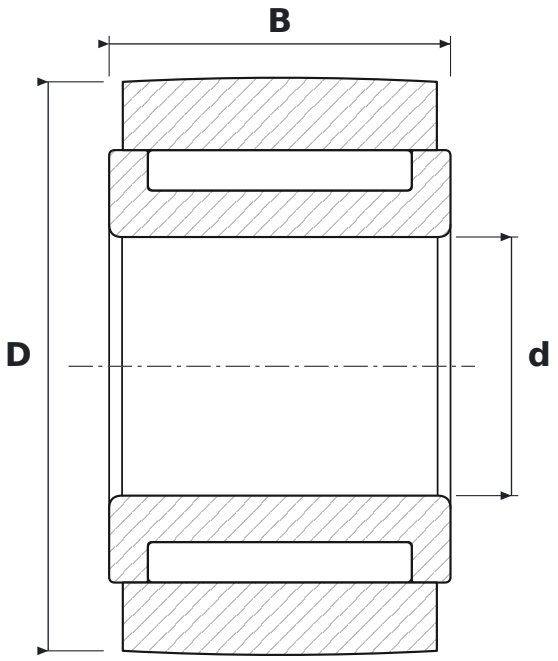

DIMENSIONS

d	bore diameter	**10 mm**
D	outside diameter	**22 mm**
B	width	**13.2 mm**

SPECIFICATIONS

Manufacturer	**INNE**
Manufacturer designation	**GCR22 EEM**
Rolling elements	**needle roller bearing, full complement**
Mass	**0.057 kg**