Track roller LR5005-2RS INA

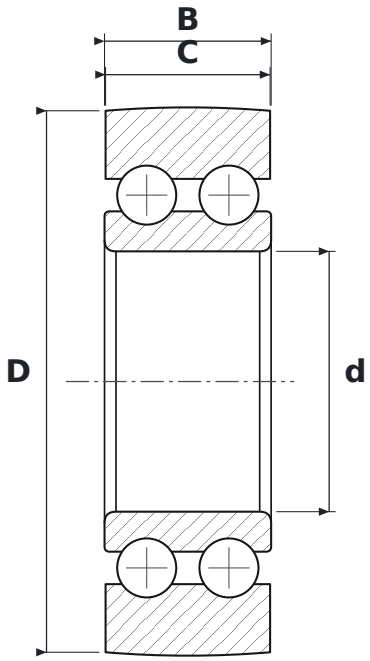

DIMENSIONS

d	bore diameter	**25 mm**
D	outside diameter	**52 mm**
C	roller running width	**15.8 mm**
B	width	**16 mm**

SPECIFICATIONS

Manufacturer	**INA**
Manufacturer designation	**LR5005-2RS**
C – outer ring width	**15.8 mm**
Rolling elements	**double-row ball bearing**
2RS	**contact rubber seals, both sides**