Track roller LR5205-2HRSTVH INA

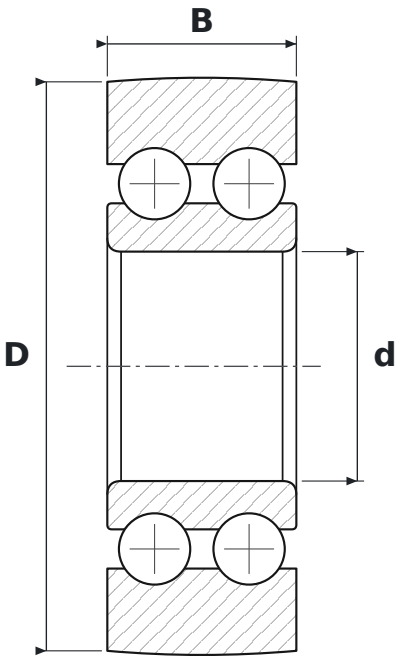

DIMENSIONS

d	bore diameter	**25 mm**
D	outside diameter	**62 mm**
B	width	**20.6 mm**

WHAT LR5205-2HRSTVH MEANS

2HRS	uszczelnienia wargowe z gumy NBR (stykowe) z obu stron, mniejsze tarcie niż w wykonaniu 2RSR
TVH	solid polyamide cage (FAG)

SPECIFICATIONS

Manufacturer	**INA**
Manufacturer designation	**LR5205-2HRSTVH**
Rolling elements	**double-row ball bearing**