# Track roller LR5205 NPP ZEN

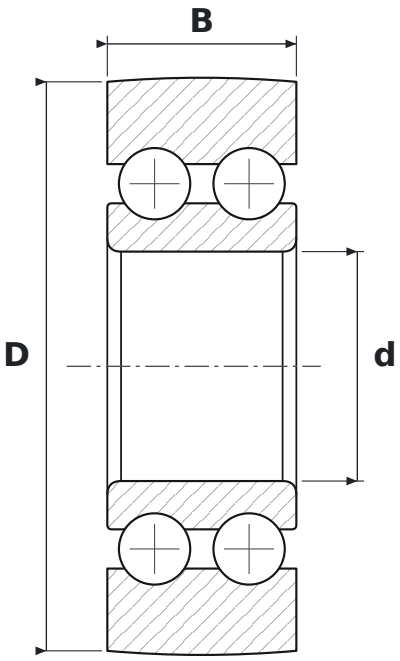


## DIMENSIONS

| | | |
|---|---|---|
| **d** | bore diameter | **25 mm** |
| **D** | outside diameter | **62 mm** |
| **B** | width | **20.6 mm** |

## SPECIFICATIONS

| | |
|---|---|
| Manufacturer | **ZEN** |
| Manufacturer designation | **LR5205 NPP** |
| Rolling elements | **double-row ball bearing** |
| 2RS | **uszczelnienia stykowe z gumy syntetycznej, dwustronne (od −20 do +110 °C)** |
| Mass | **0.34 kg** |