Track roller NATR10 NKE

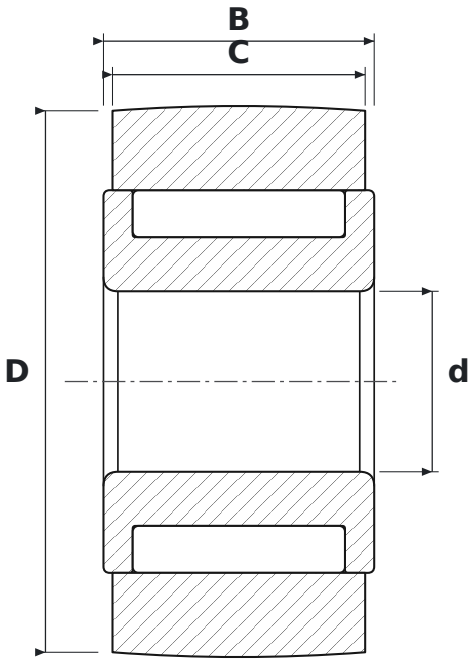

DIMENSIONS

d	bore diameter	**10 mm**
D	outside diameter	**30 mm**
C	roller running width	**14 mm**
B	width	**15 mm**

SPECIFICATIONS

Manufacturer	**NKE**
Manufacturer designation	**NATR10**
C – outer ring width	**14 mm**
Rolling elements	**needle roller bearing**
Mass	**0.06 kg**