# Track roller NATR15 UKF

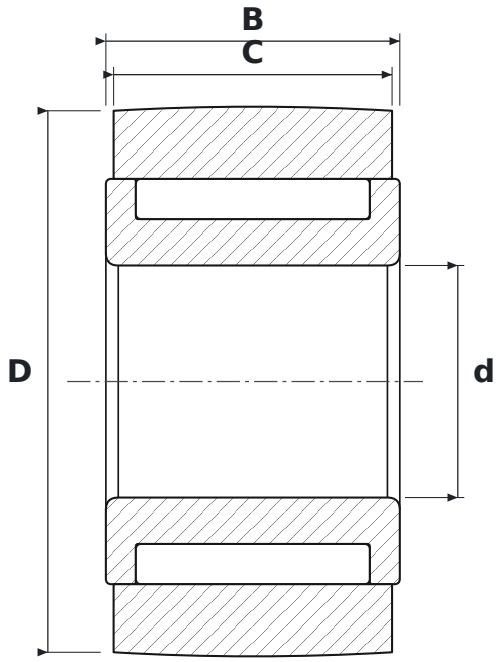


## DIMENSIONS

| | | |
|---|---|---|
| **d** | bore diameter | **15 mm** |
| **D** | outside diameter | **35 mm** |
| **C** | roller running width | **18 mm** |
| **B** | width | **19 mm** |

## SPECIFICATIONS

| | |
|---|---|
| Manufacturer | **UKF** |
| Manufacturer designation | **NATR15** |
| C – outer ring width | **18 mm** |
| Rolling elements | **needle roller bearing** |