Track roller NATR15 ZEN

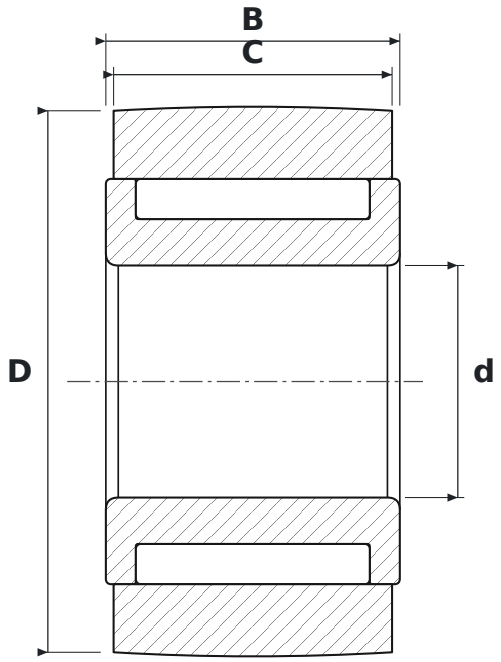

DIMENSIONS

d	bore diameter	**15 mm**
D	outside diameter	**35 mm**
C	roller running width	**18 mm**
B	width	**19 mm**

SPECIFICATIONS

Manufacturer	**ZEN**
Manufacturer designation	**NATR15**
C – outer ring width	**18 mm**
Rolling elements	**needle roller bearing**
Mass	**0.101 kg**