Track roller NATR17-PP NKE

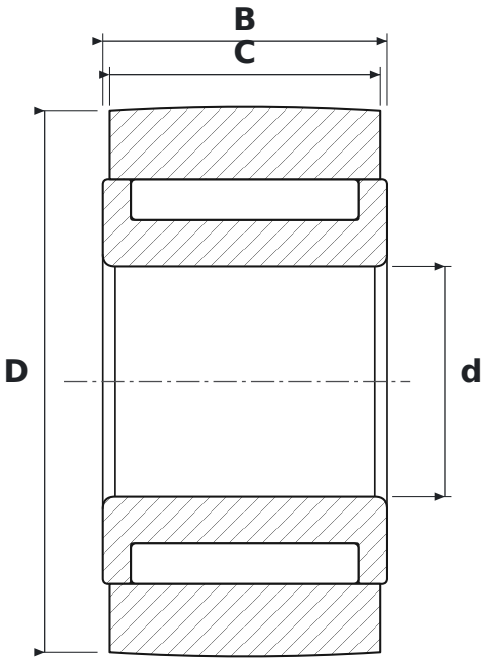

DIMENSIONS

d	bore diameter	**17 mm**
D	outside diameter	**40 mm**
C	roller running width	**20 mm**
B	width	**21 mm**

SPECIFICATIONS

Manufacturer	**NKE**
Manufacturer designation	**NATR17-PP**
C – outer ring width	**20 mm**
Rolling elements	**needle roller bearing**