Track roller NATR25 NTN

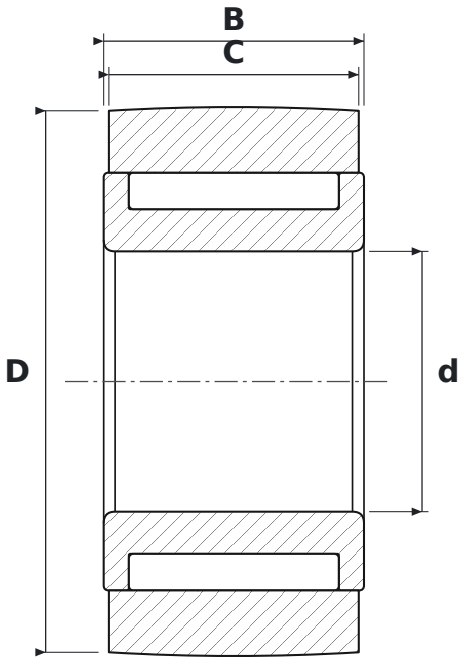

DIMENSIONS

d	bore diameter	**25 mm**
D	outside diameter	**52 mm**
C	roller running width	**24 mm**
B	width	**25 mm**

SPECIFICATIONS

Manufacturer	**NTN**
Manufacturer designation	**NATR25**
C – outer ring width	**24 mm**
Rolling elements	**needle roller bearing**
Mass	**0.286 kg**