Track roller NATR25 UKF

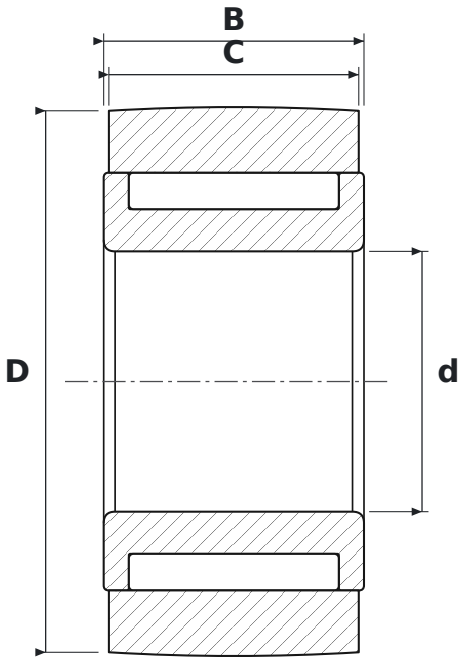

DIMENSIONS

d	bore diameter	**25 mm**
D	outside diameter	**52 mm**
C	roller running width	**24 mm**
B	width	**25 mm**

SPECIFICATIONS

Manufacturer	**UKF**
Manufacturer designation	**NATR25**
C – outer ring width	**24 mm**
Rolling elements	**needle roller bearing**