# Track roller NATR30 PP NKE

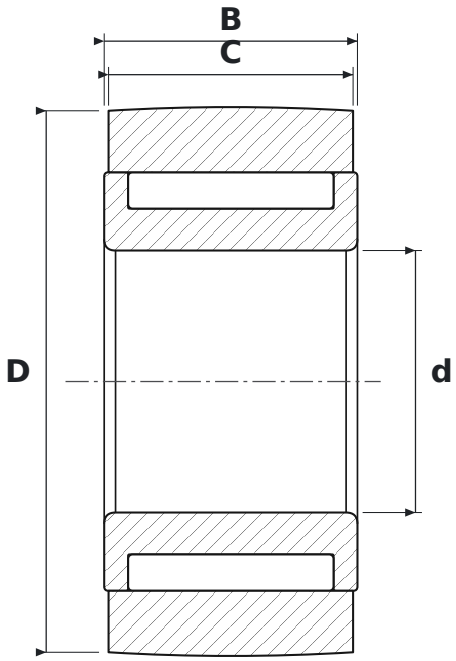


## DIMENSIONS

| | | |
|---|---|---|
| **d** | bore diameter | **30 mm** |
| **D** | outside diameter | **62 mm** |
| **C** | roller running width | **28 mm** |
| **B** | width | **29 mm** |

## SPECIFICATIONS

| | |
|---|---|
| Manufacturer | **NKE** |
| Manufacturer designation | **NATR30 PP** |
| C – outer ring width | **28 mm** |
| Rolling elements | **needle roller bearing** |