Track roller NATR30 PP SKF

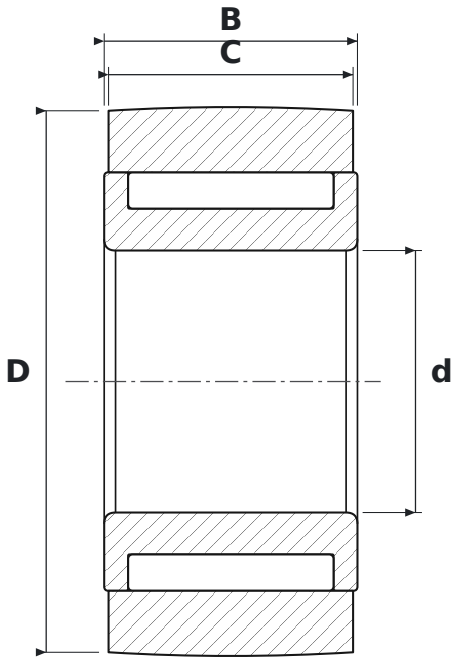

DIMENSIONS

d	bore diameter	**30 mm**
D	outside diameter	**62 mm**
C	roller running width	**28 mm**
B	width	**29 mm**

SPECIFICATIONS

Manufacturer	**SKF**
Manufacturer designation	**NATR30 PP**
C – outer ring width	**28 mm**
Rolling elements	**needle roller bearing**