Track roller NATR5 INA

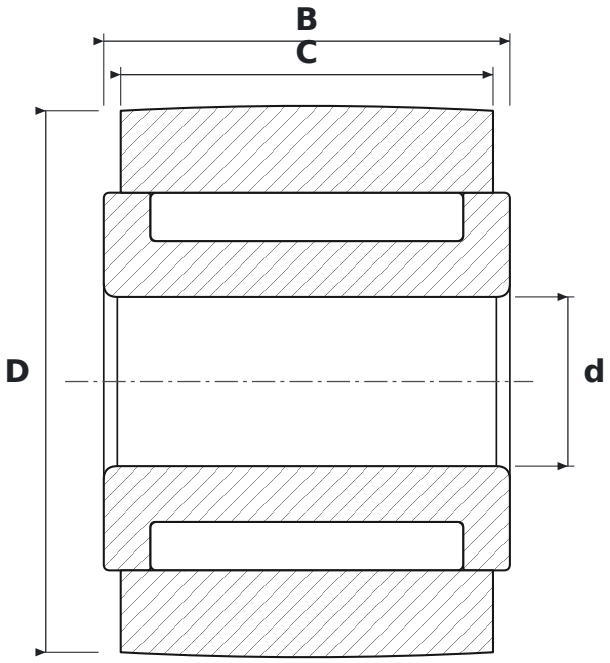

DIMENSIONS

d	bore diameter	**5 mm**
D	outside diameter	**16 mm**
C	roller running width	**11 mm**
B	width	**12 mm**

SPECIFICATIONS

Manufacturer	**INA**
Manufacturer designation	**NATR5**
C – outer ring width	**11 mm**
Rolling elements	**needle roller bearing**