Track roller NATR5 XLL/3AS NTN

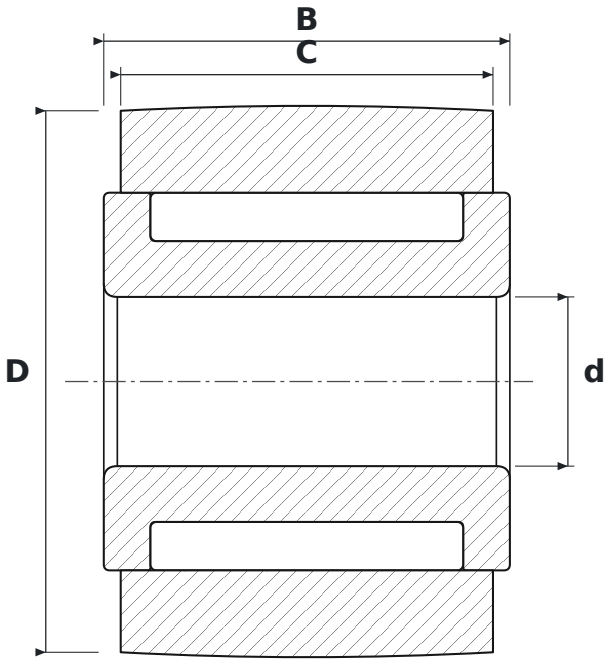

DIMENSIONS

d	bore diameter	**5 mm**
D	outside diameter	**16 mm**
C	roller running width	**11 mm**
B	width	**12 mm**

SPECIFICATIONS

Manufacturer	**NTN**
Manufacturer designation	**NATR5 XLL/3AS**
C – outer ring width	**11 mm**
Rolling elements	**needle roller bearing**
Mass	**0.019 kg**