Track roller NATR50 PP SKF

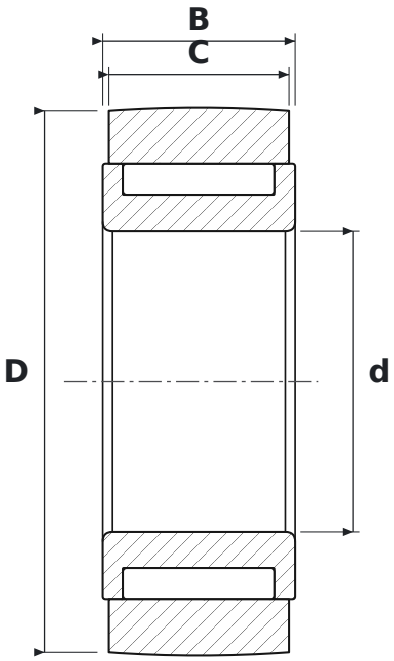

DIMENSIONS

d	bore diameter	**50 mm**
D	outside diameter	**90 mm**
C	roller running width	**30 mm**
B	width	**32 mm**

SPECIFICATIONS

Manufacturer	**SKF**
Manufacturer designation	**NATR50 PP**
C – outer ring width	**30 mm**
Rolling elements	**needle roller bearing**