Track roller NATR6 NKE

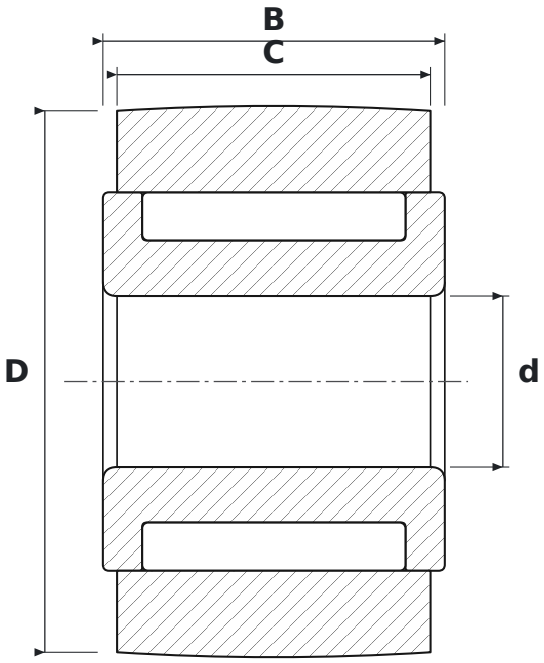

DIMENSIONS

d	bore diameter	**6 mm**
D	outside diameter	**19 mm**
C	roller running width	**11 mm**
B	width	**12 mm**

SPECIFICATIONS

Manufacturer	**NKE**
Manufacturer designation	**NATR6**
C – outer ring width	**11 mm**
Rolling elements	**needle roller bearing**
Mass	**0.02 kg**