# Track roller NATR8 INA

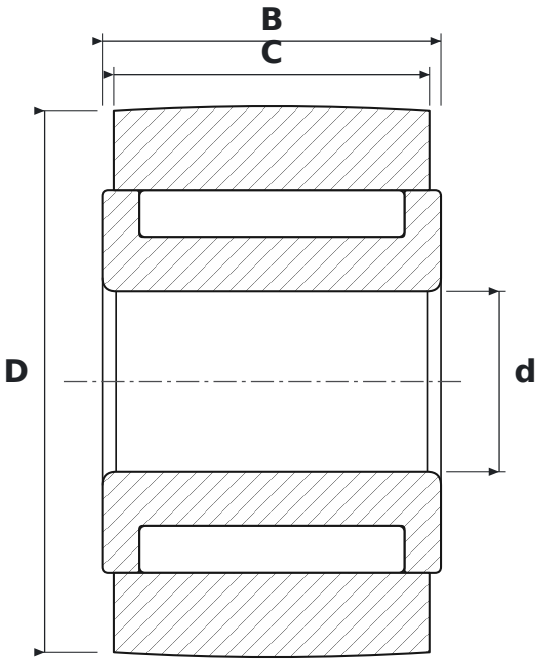


## DIMENSIONS

| | | |
|---|---|---|
| **d** | bore diameter | **8 mm** |
| **D** | outside diameter | **24 mm** |
| **C** | roller running width | **14 mm** |
| **B** | width | **15 mm** |

## SPECIFICATIONS

| | |
|---|---|
| Manufacturer | **INA** |
| Manufacturer designation | **NATR8** |
| C – outer ring width | **14 mm** |
| Rolling elements | **needle roller bearing** |
| Mass | **0.041 kg** |