Track roller NATV10 PP INA

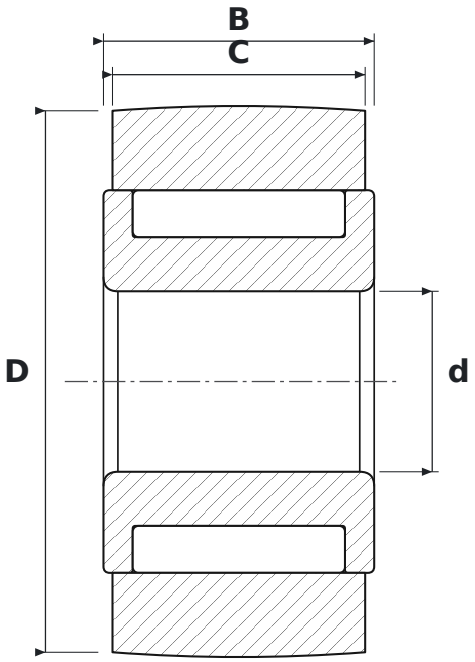

DIMENSIONS

d	bore diameter	**10 mm**
D	outside diameter	**30 mm**
C	roller running width	**14 mm**
B	width	**15 mm**

SPECIFICATIONS

Manufacturer	**INA**
Manufacturer designation	**NATV10 PP**
C – outer ring width	**14 mm**
Rolling elements	**needle roller bearing, full complement**
Mass	**0.064 kg**