# Track roller NATV10 SKF

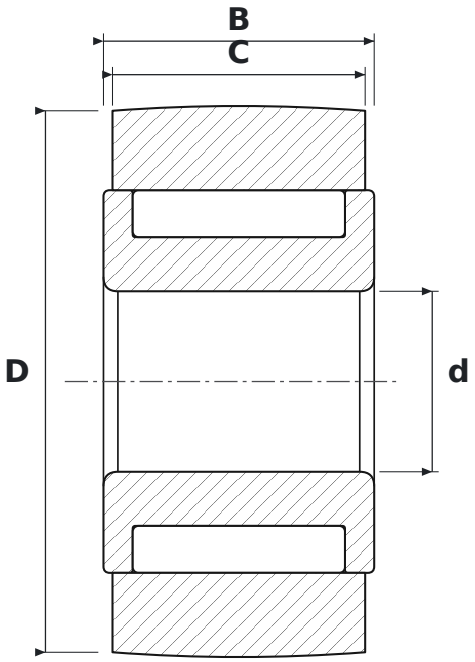


## DIMENSIONS

| | | |
|---|---|---|
| **d** | bore diameter | **10 mm** |
| **D** | outside diameter | **30 mm** |
| **C** | roller running width | **14 mm** |
| **B** | width | **15 mm** |

## SPECIFICATIONS

| | |
|---|---|
| Manufacturer | **SKF** |
| Manufacturer designation | **NATV10** |
| C – outer ring width | **14 mm** |
| Rolling elements | **needle roller bearing, full complement** |