# Track roller NATV17 .PP UKF

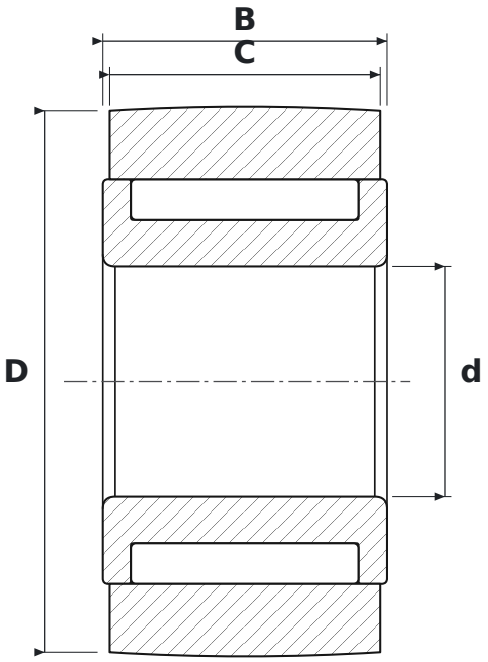


## DIMENSIONS

| | | |
|---|---|---|
| **d** | bore diameter | **17 mm** |
| **D** | outside diameter | **40 mm** |
| **C** | roller running width | **20 mm** |
| **B** | width | **21 mm** |

## SPECIFICATIONS

| | |
|---|---|
| Manufacturer | **UKF** |
| Manufacturer designation | **NATV17 .PP** |
| C – outer ring width | **20 mm** |
| Rolling elements | **needle roller bearing, full complement** |