Track roller NATV20 PP SKF

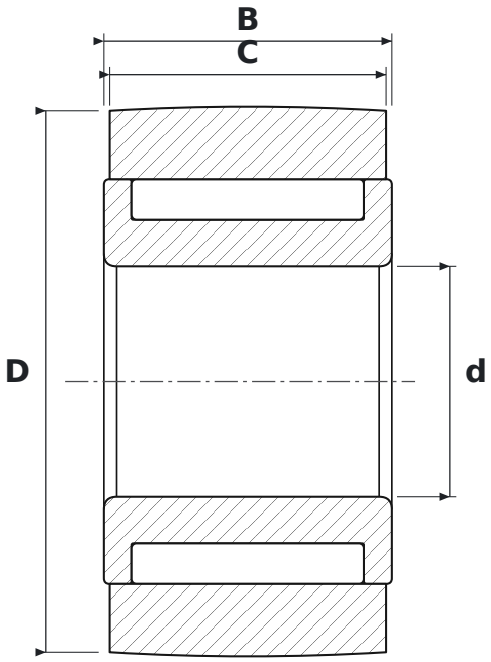

DIMENSIONS

d	bore diameter	**20 mm**
D	outside diameter	**47 mm**
C	roller running width	**24 mm**
B	width	**25 mm**

SPECIFICATIONS

Manufacturer	**SKF**
Manufacturer designation	**NATV20 PP**
C – outer ring width	**24 mm**
Rolling elements	**needle roller bearing, full complement**