Track roller NATV6 PP INA

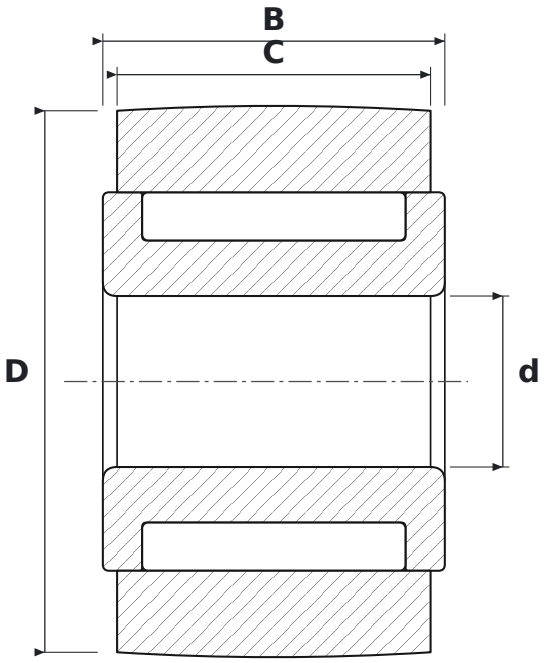

DIMENSIONS

d	bore diameter	**6 mm**
D	outside diameter	**19 mm**
C	roller running width	**11 mm**
B	width	**12 mm**

SPECIFICATIONS

Manufacturer	**INA**
Manufacturer designation	**NATV6 PP**
C – outer ring width	**11 mm**
Rolling elements	**needle roller bearing, full complement**
Mass	**0.021 kg**