Track roller NATV8 SKF

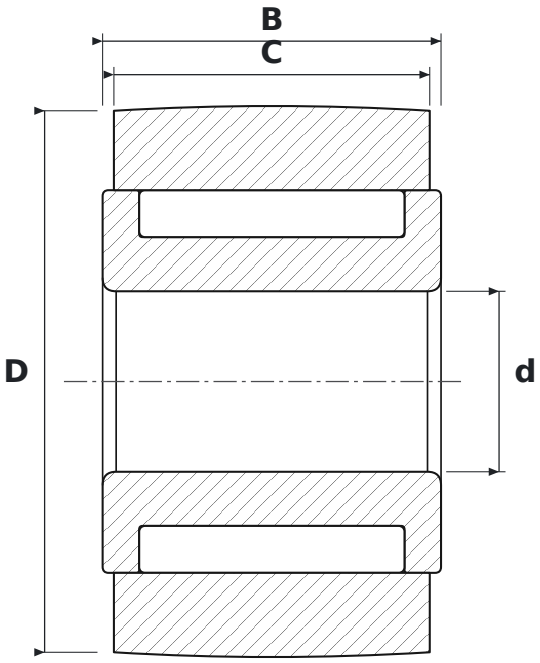

DIMENSIONS

d	bore diameter	**8 mm**
D	outside diameter	**24 mm**
C	roller running width	**14 mm**
B	width	**15 mm**

SPECIFICATIONS

Manufacturer	**SKF**
Manufacturer designation	**NATV8**
C – outer ring width	**14 mm**
Rolling elements	**needle roller bearing, full complement**