Track roller NUTR20-X INA

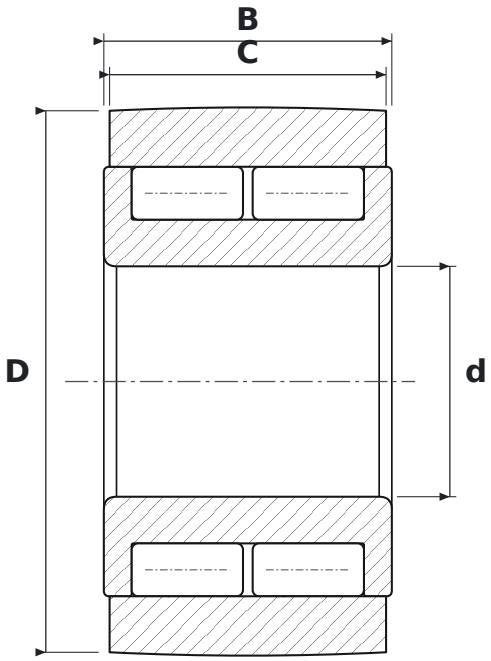

DIMENSIONS

d	bore diameter	**20 mm**
D	outside diameter	**47 mm**
C	roller running width	**24 mm**
B	width	**25 mm**

SPECIFICATIONS

Manufacturer	**INA**
Manufacturer designation	**NUTR20-X**
C – outer ring width	**24 mm**
Rolling elements	**double-row cylindrical roller bearing, full complement**