Track roller NUTR25 A SKF

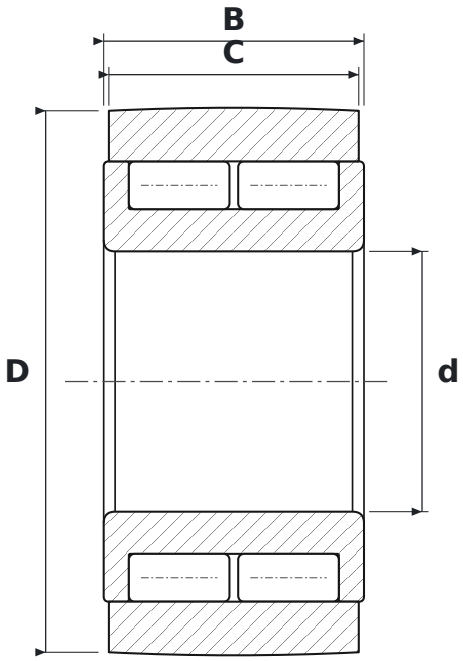

DIMENSIONS

d	bore diameter	**25 mm**
D	outside diameter	**52 mm**
C	roller running width	**24 mm**
B	width	**25 mm**

SPECIFICATIONS

Manufacturer	**SKF**
Manufacturer designation	**NUTR25 A**
C – outer ring width	**24 mm**
Rolling elements	**double-row cylindrical roller bearing, full complement**