Track roller NUTR45100 A SKF

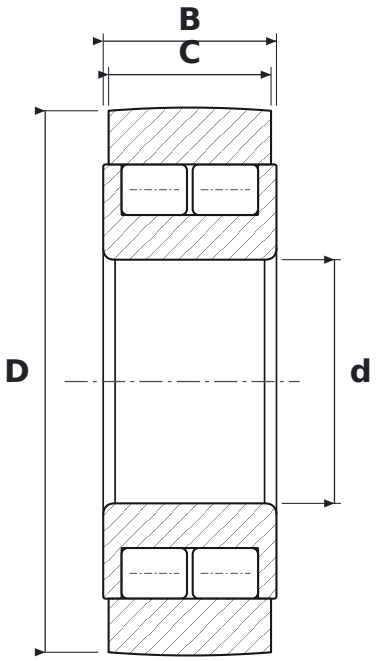

DIMENSIONS

d	bore diameter	**45 mm**
D	outside diameter	**100 mm**
C	roller running width	**30 mm**
B	width	**32 mm**

SPECIFICATIONS

Manufacturer	**SKF**
Manufacturer designation	**NUTR45100 A**
C – outer ring width	**30 mm**
Rolling elements	**double-row cylindrical roller bearing, full complement**
Seal	**open – no seals**