# Track roller NUTR45100 A UKF

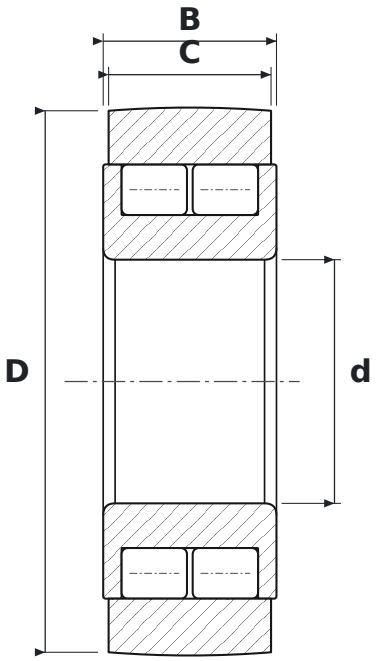


## DIMENSIONS

| | | |
|---|---|---|
| **d** | bore diameter | **45 mm** |
| **D** | outside diameter | **100 mm** |
| **C** | roller running width | **30 mm** |
| **B** | width | **32 mm** |

## SPECIFICATIONS

| | |
|---|---|
| Manufacturer | **UKF** |
| Manufacturer designation | **NUTR45100 A** |
| C – outer ring width | **30 mm** |
| Rolling elements | **double-row cylindrical roller bearing, full complement** |
| Seal | **open – no seals** |