Track roller NUTR50 X INA

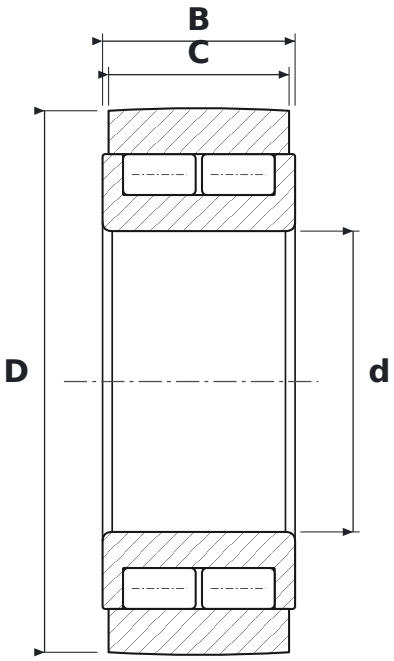

DIMENSIONS

d	bore diameter	**50 mm**
D	outside diameter	**90 mm**
C	roller running width	**30 mm**
B	width	**32 mm**

SPECIFICATIONS

Manufacturer	**INA**
Manufacturer designation	**NUTR50 X**
C – outer ring width	**30 mm**
Rolling elements	**double-row cylindrical roller bearing, full complement**
Mass	**0.95 kg**