Track roller PWTR17-2RS INA

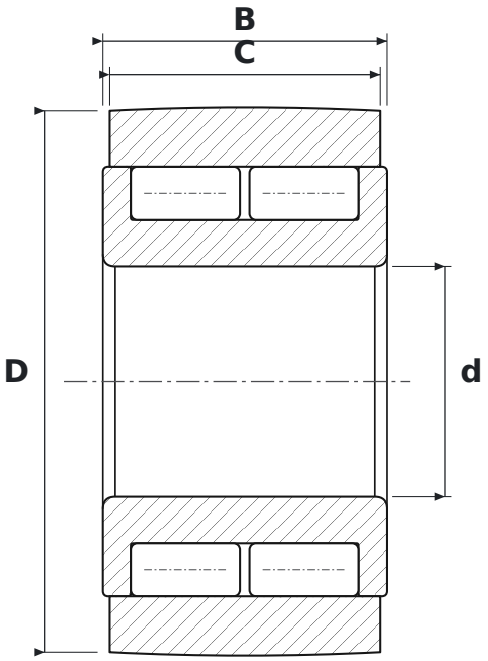

DIMENSIONS

d	bore diameter	**17 mm**
D	outside diameter	**40 mm**
C	roller running width	**20 mm**
B	width	**21 mm**

SPECIFICATIONS

Manufacturer	**INA**
Manufacturer designation	**PWTR17-2RS**
C – outer ring width	**20 mm**
Rolling elements	**double-row cylindrical roller bearing, full complement**
Mass	**0.147 kg**