# Linear bushing KB50 P INA

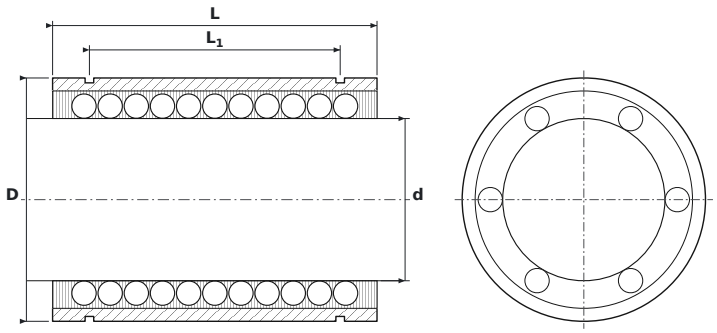


## DIMENSIONS

| | | |
|---|---|---|
| **d** | bore diameter | **50 mm** |
| **D** | outside diameter | **75 mm** |
| **L** | bushing length | **100 mm** |
| **L1** | distance between circlip grooves | **77.3 mm** |
| **L2** | circlip groove width | **2.65 mm** |
| **D0** | groove bottom diameter | **72 mm** |

## SPECIFICATIONS

| | |
|---|---|
| Manufacturer | **INA** |
| Manufacturer designation | **KB50 P** |
| Rolling elements | **ball bushing** |
| Basic dynamic load rating C | **8.7 kN** |
| Basic static load rating C0 | **6.3 kN** |
| Mass | **0.983 kg** |